KEEP TUBING A MINIMUM OF 12" VERTICALLY OR 6" HORIZONTALLY FROM SOURCES OF HIGH HEAT SUCH AS LIGHT FIXTURES, FLUES OR HEATING EQUIPMENT.

NOTE:
USE ONLY CONTINUOUS LENGTH TUBING (NO FITTINGS) WHEN INSTALLING PEX UNDER OR WITHIN A SLAB. PROTECT PEX TUBING WITH NONMETALLIC SLEEVES WHERE IT PENETRATES A SLAB OR FOUNDATION WALL.

MIN. CLEARANCES

TUBING SIZE	MIN. RADIUS BENDING
3/8"	4"
1/2"	5"
3/4"	7"
1"	9"

DO NOT CRUSH OR KINK TUBING

DO NOTE DRAG TUBING OVER ROUGH TERRAIN, ROCKS, OR ANY SURFACE THAT CAN CUT, PUNCTURE OR DAMAGE TUBING WALL.

TUBING AND FITTINGS SHALL BE STORED UNDERCOVER FOR CLEANLINESS AND TO AVOID EXPOSURE TO SUNLIGHT. CONSULT MANUFACTURER FOR RECOMMENDED LIMITS TO OUTSIDE STORAGE.

PEX PIPE HANDLING DETAILS

NO SCALE

THIS TYPE (COLD EXPANSION) OF FITTING REQUIRES THAT THE PEX PIPING, WITH REIFORCING PEX RING PLACED OVER THE END OF THE END OF THE PIPE, IS EXPANDED BEFORE THE FITTING IS INSERTED INTO THE PIPE END. THE EXPANDED PIPE END IS ALLOWED TO RETRACT ONTO THE FITTING TO FORM THE SEAL. THE MEMORY OF THE PIPE ALLOWS IT TO TIGHTEN OVER THE FITTING. AN EXPANDER TOOL IS REQUIRED TO EXPAND THE PIPE AND THE PEX RING TOGETHER.

ALL JOINTS (TEES, ELBOWS, COUPLINGS, ETC.) ARE JOINTED SIMILARLY.

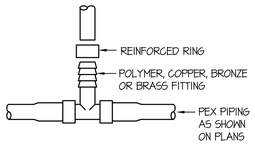

NOTE:
STAINLESS STEEL CAMP BANDS ARE ALSO PERMITTED FOR REINFORCING RING.

PEX PIPE FITTING DETAILS

NO SCALE

NOTES:

1- PROVIDE PITCH POCKET CONSTRUCTION, ADDITIONAL FLASHING OR WEATHER CAP AS REQUIRED FOR WATERPROOF CONSTRUCTION. DO NOT RIGIDLY TIE DUCT OR PIPE TO STRUCTURE IN ANY WAY.

2- SPACE BETWEEN DUCT OR PIPE AND METAL SLEEVE SHALL BE FREE OF ANY FOREIGN MATERIALS.

3- DUCT OR PIPE SHALL NOT DIRECTLY CONTACT STRUCTURE, WEDGES SHALL NOT BE USED TO MAINTAIN PIPE IN POSITION.

4- DUCT OR PIPE MUST BE APPROX. CENTERED ON OPENINGS. PROVIDE ADDITIONAL CLEARANCE FOR POSITIONAL CHANGE OF DUCT DUE TO LOADING OF DUCT OR OPERATIONS OF SYSTEM.

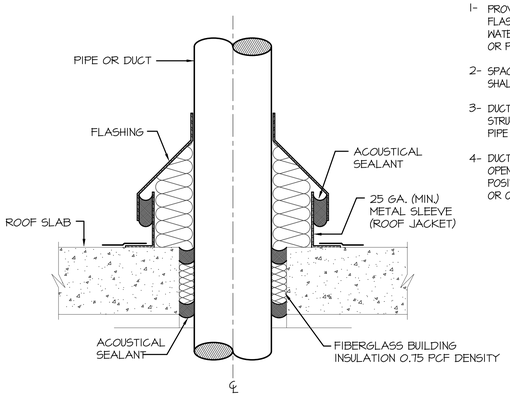

VENT THRU ROOF DETAIL

NO SCALE

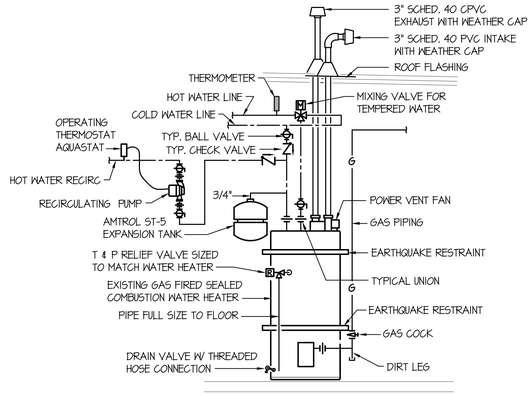

GAS FIRED WATER HEATER PIPING DIAGRAM

NO SCALE

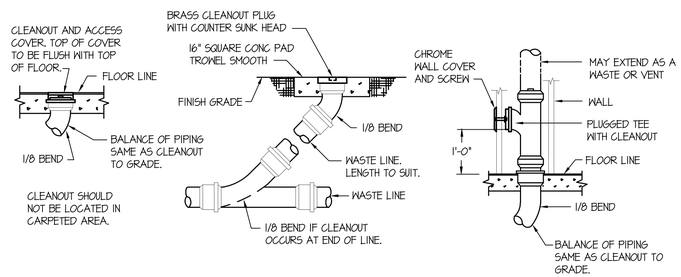

FLOOR CLEANOUT (FCO) CLEANOUT TO GRADE (COTG) WALL CLEANOUT (WCO)

CLEAN OUT DETAILS

NO SCALE

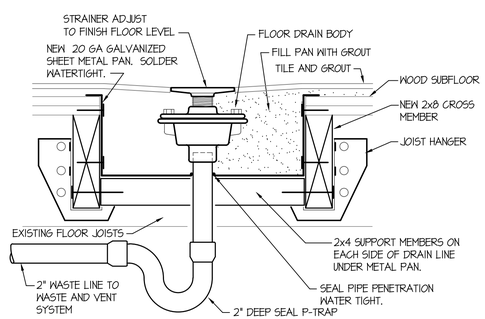

FLOOR DRAIN IN WOOD FLOOR DETAIL

NO SCALE

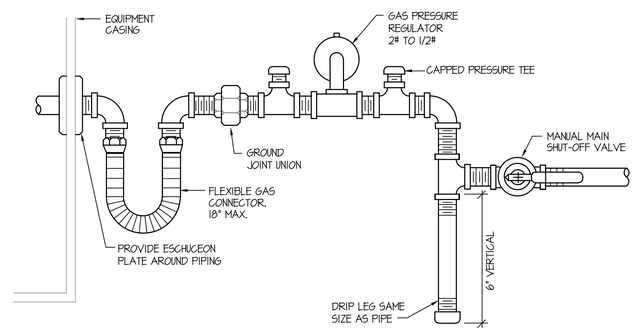

GAS PRESSURE REGULATOR DETAIL

NO SCALE

FIXTURE SCHEDULE

SYM.	DESCRIPTION	HOT	COLD	WASTE	VENT
DF-1	BI-LEVEL DRINKING FOUNTAIN - ELKAY MODEL LZSTL8WSLK WITH BOTTLE FILLER STATION & FILTER FRONT PUSH BAR OPERATORS, 1/2" STOP, 1-1/2" P-TRAP AND FLEX-GUARD SAFETY BUBBLER VALVE.	---	1/2"	1-1/2"	1-1/2"
L-1	ADA WALL HUNG LAVATORY - KOHLER K-2031-0 "GREENWICH" WITH WALL CARRIER, KOHLER K-13412 BATTERY POWERED TOUCHLESS FAUCET & OPTIONAL MIXING VALVE K-13601, K-7715 OPEN GRID STRAINER WITH OFFSET WASTE LINE, 1/2" STOPS AND 1-1/4" P-TRAP. PROVIDE INSULATING JACKET ON HW AND WASTE PIPING.	1/2"	1/2"	1-1/2"	1-1/2"
RP-1	RECIRCULATING PUMP - GRUNDFOS MODEL UP15-10B7 BRONZE PUMP WITH 3/4" FLANGES (2 GPM @ 5' OF HEAD) 120/60/1. SEE DETAIL ON THIS SHEET.	1/2"	1/2"	---	---
S-1	DOUBLE COMPARTMENT SINK - ELKAY MODEL 3322 WITH (2) LK-35 DUO-STRAINERS, 1/2" STOPS, 1-1/2" P-TRAP, AND LK6000 GOOSENECK FAUCET WITH SINGLE LEVER HANDLE AND PULL-DOWN SPRAY.	1/2"	1/2"	1-1/2"	1-1/2"
S-2	ADA WALL HUNG SINK - KOHLER K-2031-0 "GREENWICH" WITH WALL CARRIER, KOHLER K-13412 BATTERY POWERED TOUCHLESS FAUCET & OPTIONAL MIXING VALVE K-13601, K-7715 OPEN GRID STRAINER WITH OFFSET WASTE LINE, 1/2" STOPS AND 1-1/4" P-TRAP. PROVIDE INSULATING JACKET ON HW AND WASTE PIPING.	1/2"	1/2"	1-1/2"	1-1/2"
WC-1	TANK TYPE WATER CLOSET - KOHLER K-3999 "HIGHLINE" W/ ELONGATED BOWL, K-4670-C WHITE OPEN FRONT SEAT, BOLT CAPS AND 1/2" STOP VALVE.	---	1/2"	4"	2"
WH-1	UNDER COUNTER ELECTRIC INSTANTANEOUS WATER HEATER - EEMAX MODEL SP3512 WITH 3.5 KW HEATING ELEMENT (29 AMPS) AND ½" WATER LINE CONNECTIONS. (120 VOLT - 1 PHASE)	1/2"	1/2"	---	---

MOUNTAIN WEST ARCHITECTURE

SEAL:

REV	DATE	DESCRIPTION

PROJECT:

Tenant Improvement For:
01 Arts Xibit Gallery
455 25th Street
Ogden, Utah 8441

MOUNTAIN WEST ARCHITECTURE | 543 25TH STREET - OGDEN, UT 84401 | PH: 801-388-6052 | www.mountainwestarchitecture.com

REGISTERED PROFESSIONAL ENGINEER
No. 322307
DWAYNE S. LUDWEEKS
STATE OF UTAH
MAY 2020

Engineered Systems Associates
1355 EAST CENTER
POCATELLO, IDAHO 83201
PHONE: (208) 233-0501
FAX: (208) 233-0529
EMAIL: esa@engsystems.com

ESA JOB NUMBER: 20036

SHEET TITLE: **DETAILS AND SCHEDULES**

PROJECT: **FAYES LAUNDRY**

SHEET NUMBER:

P201

DO NOT SCALE DRAWING